DigiCan

The digital printing machine for cans

//polytype

mall//herlan

A new dimension in can decoration

// For fast design changes and a photorealistic decoration
// Highly reliable printing machine with high level of productivity
// Cost-efficient for small and middle size batches
// All around service from one hand

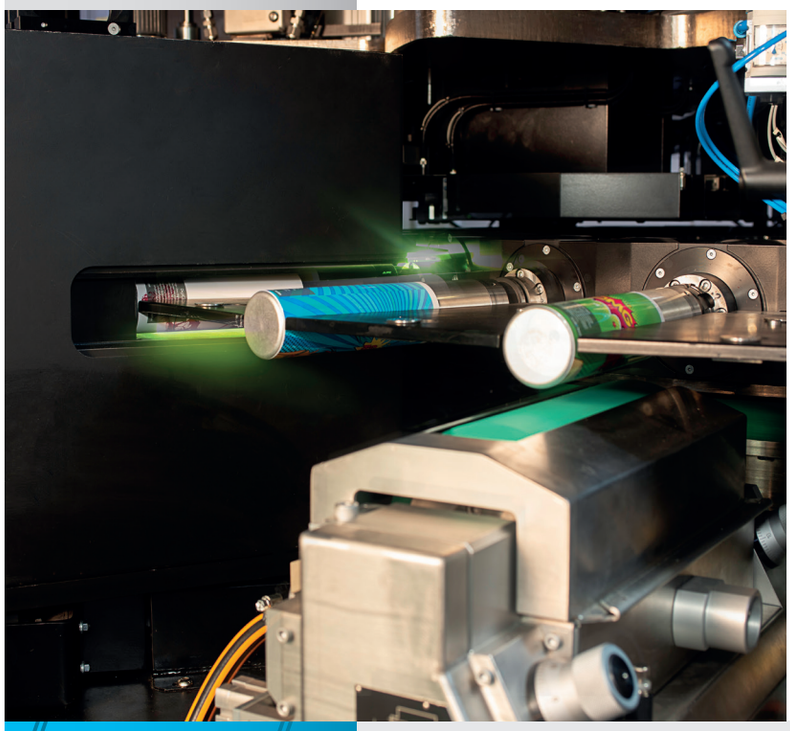

Specification of DigiCan

Product range
// Ø min.: 35 mm
// Ø max.: 66 mm
// Minimum Height: 50 mm
// Maximum Height: 215 mm
// Maximum print height up to: 210 mm
// Output speed up to 120 cans/min

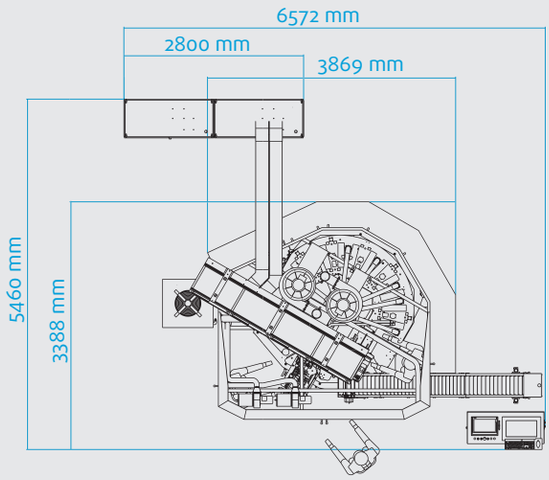

//polytype

Polytype AG
26, route de la Glâne | CH-1701 Fribourg/Switzerland
Phone +41 26 426 11 11
info@polytype.com | www.polytype.com

mall//herlan

Mall + Herlan GmbH
Wöschbacher Strasse 33 | DE-76327 Pfinztal/Germany
Phone +49 721 946 01 0
info@mall-herlan.com | www.mall-herlan.com